Exam Date & Time: 01-Dec-2023 (09:30 AM - 12:30 PM)

MANIPAL ACADEMY OF HIGHER EDUCATION

FIRST SEMESTER B.TECH. EXAMINATIONS - NOVEMBER/DECEMBER 2023
SUBJECT: ELE 1071 / ELE-1071 - BASIC ELECTRICAL TECHNOLOGY

BASIC ELECTRICAL TECHNOLOGY [ELE 1071]

Marks: 50 **Duration: 180 mins.**

A

Answer all the questions.

1A) Determine the current $\mathbf{I_x}$ in the given network. (3)

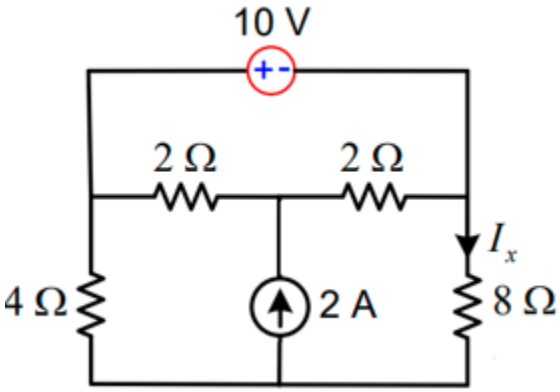

1B) Determine the **maximum power** that can be delivered to the variable resistor **R** in the given circuit. (3)

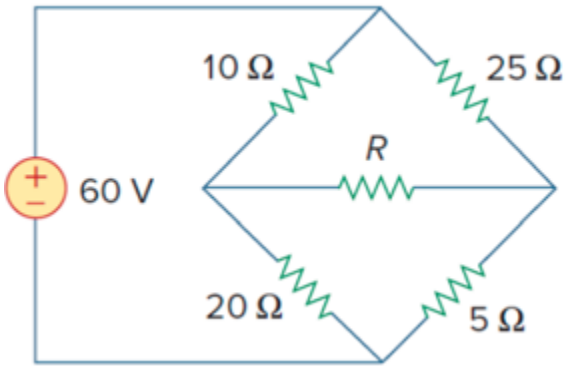

1C) Use **superposition** principle to determine the current i flowing through **3 Ω** resistor in the given circuit. (4)

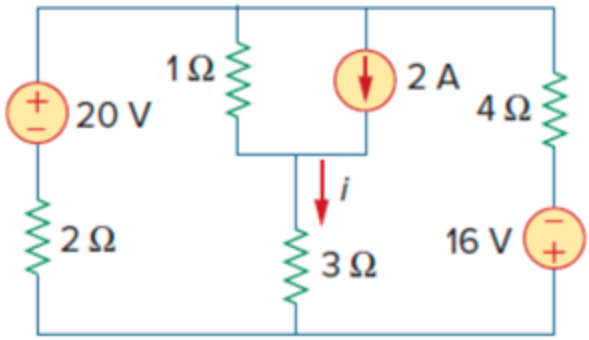

2A) The switch in circuit shown was in **Position 1** for a long time. It is moved from **Position 1** to **Position 2** at time **t = 0**. Obtain $\mathbf{V_C\ (t)}$ for **t > 0**. Determine the time when capacitor voltage becomes **25 V**.

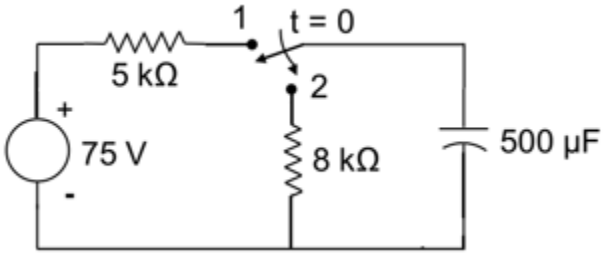

(3)

2B) The magnetic system shown has a ring of **circular** cross-section. The mild steel section has a mean length which is **twice** that of the men length of the cast steel section. Calculate the reluctance of each section, and the flux density. Assume the relative permeability values of mild steel and cast steel to be **2000** and **1350** respectively.
(Absolute permeability of air $= 4\pi \times 10^{-7}$ H/m)

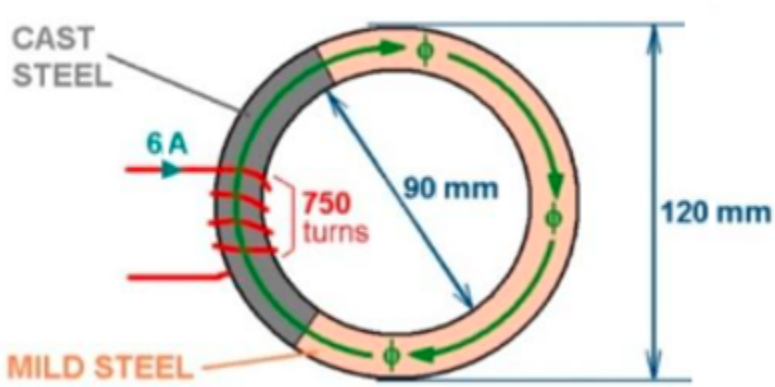

(4)

2C) Determine the equivalent inductance between the terminals **A** & **B**, if the three coupled coils shown have coupling coefficients of **0.7.** (3)

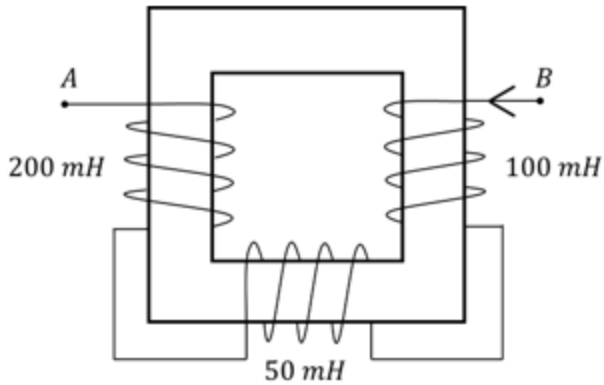

3A) Determine the **Average** and **RMS** value of the current waveform shown below.

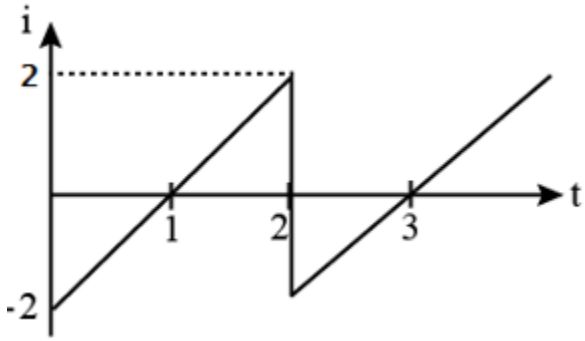

(3)

3B) A series circuit of resistance of **10 Ω**, an inductance of **13 mH** and a capacitance of **150 μF** connected in series. A supply of **100 V** at **50 Hz** is given to the circuit. Find the impedance, current, power factor and power consumed in the circuit. (3)

3C) For the AC circuit shown below, determine (a) current in each branch, (b) total circuit current, (c) power factor, and (d) power consumed by the circuit.

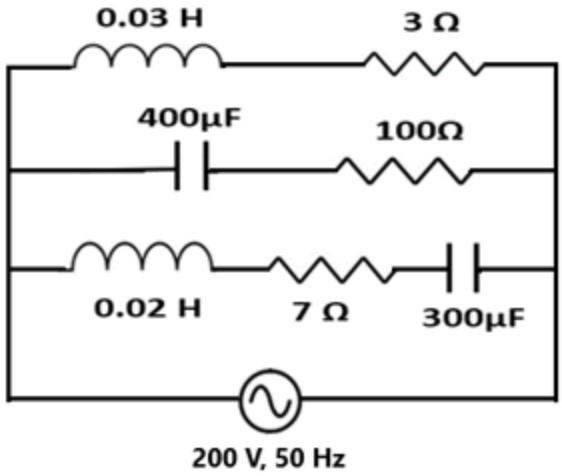

(4)

4A) A coil of resistance **40 Ω** and inductance **0.75 H** forms a part of a series **RLC** circuit for which the resonant frequency is **55 Hz.** If the supply is **250 V, 50 Hz,** determine (a) the line current, (b) the power factor, and (c) the voltage across the coil. (4)

4B) A balanced delta-connected load having an impedance of **(20 - j 15) Ω** per phase is connected to a 3-phase, **a-b-c** sequence source with $\mathbf{V_{ab} = 330 \angle 0^o}$ **Volts.** Calculate the phase and line currents and the reactive power at the load. (6)

5A) Calculate the line currents for the given 3-phase circuit. (4)

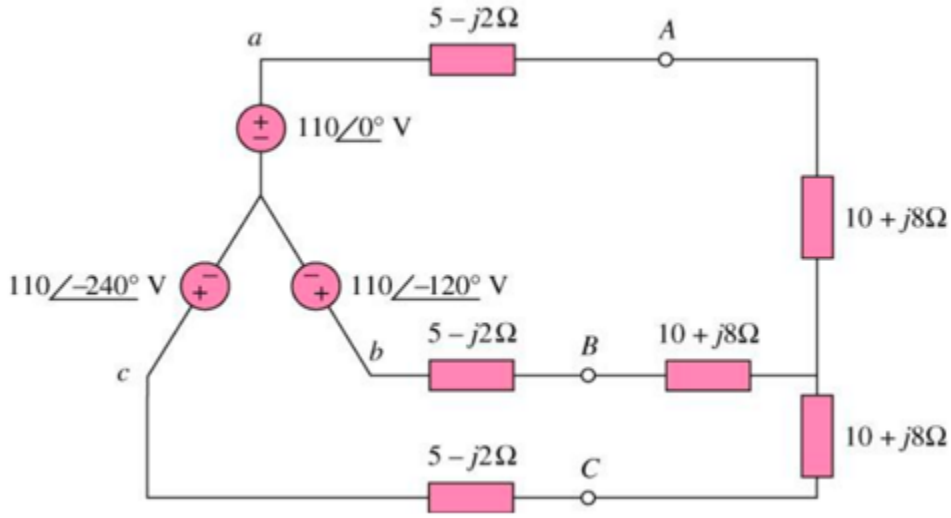

5B) With a neat schematic discuss the working principle of a 3-phase digital energy meter. (3)

5C) List various conventional and non-conventional power generation sources outlining their salient features in brief. (3)

-----End-----